APERTO40F
瑞士萬向收納系統

可將櫥櫃門收納在最左或最右邊的空間

可應用於書櫃、櫥櫃、廚櫃

DESCRIPTION

- 適用門重：40KG(單片門)
- 適用門高：<2600mm
- 適用門寬：400~900mm
- 適用門厚：19~25mm

訂購方法 請先告知櫥櫃總寬、門片數、門片寬 **註1：特殊尺寸須另外訂製 註2：最多7片門**

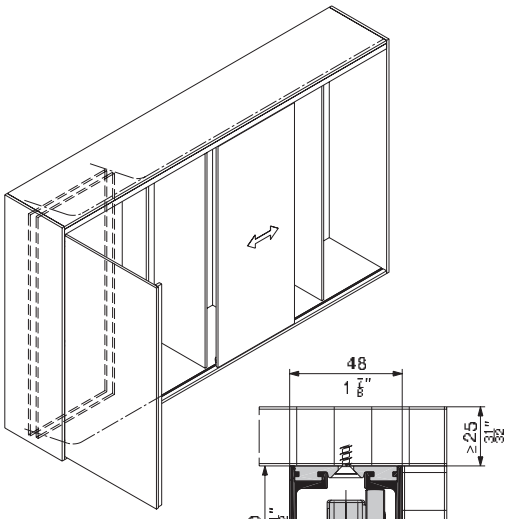

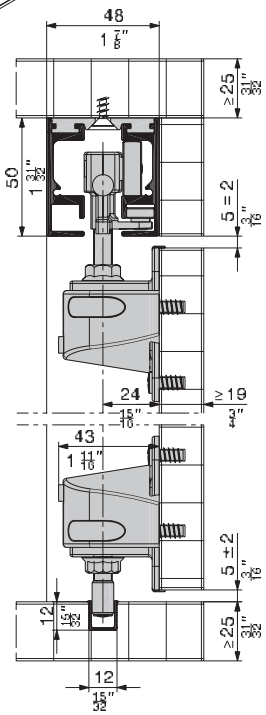

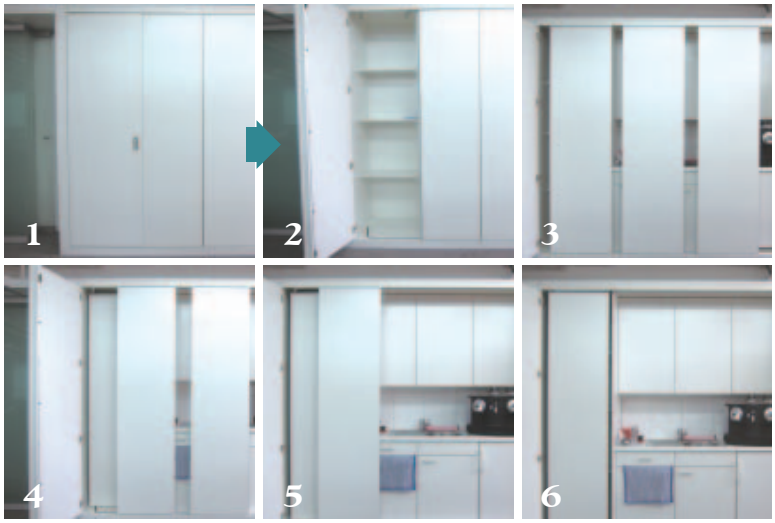

Convenient sliding door hardware system for multi-door cabinet fronts weighing up to 40 kg (88 lbs.), that can be stacked out of sight in a niche or cabinet compartment.
When closed, the cabinet front is flush, with uniform gaps between panels if desired, even in combination with hinged doors on upper and lower cabinets.
With this sophisticated system, the same hardware kit may be used for left and right-hand stacking areas. The number and width of door panels is also flexible.
Unrestricted access to the entire cabinet width while the front is open.

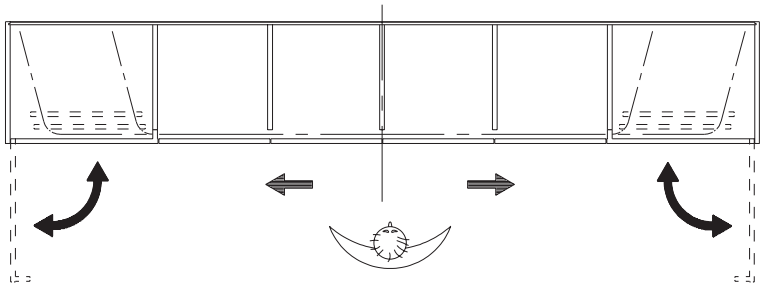

APERTO40F

Hardware system for cabinet sliding doors up to 40 kg (88 lbs.).
Stacking parallel to the sliding axis.